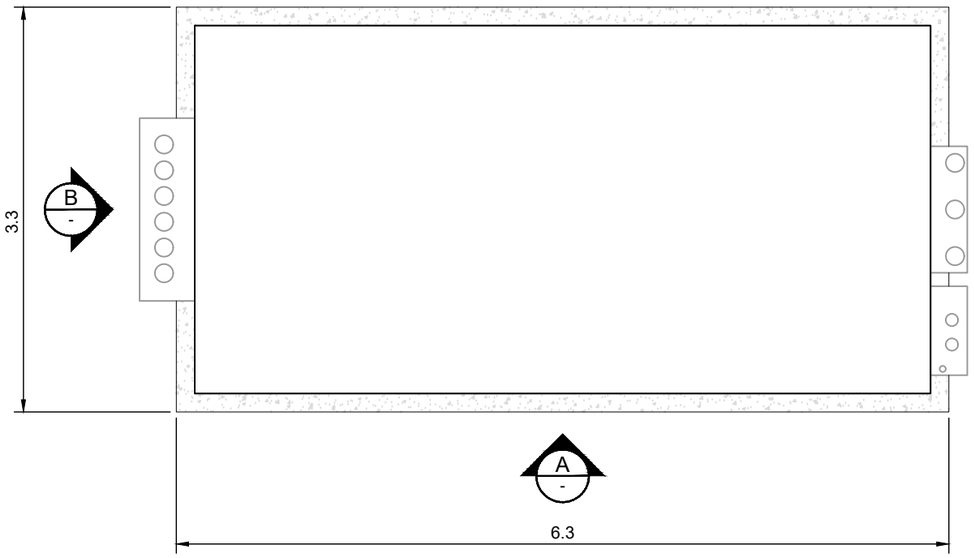

PLAN
SCALE 1:50

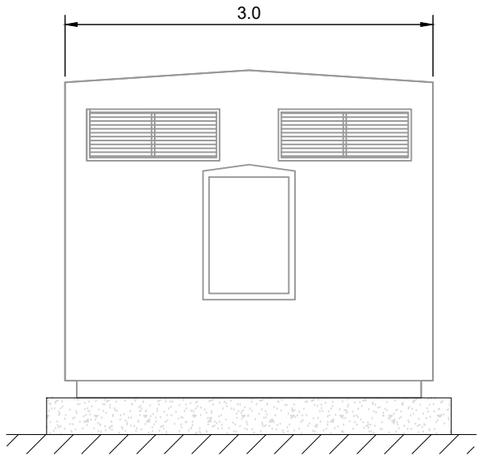

ELEVATION B
SCALE 1:50

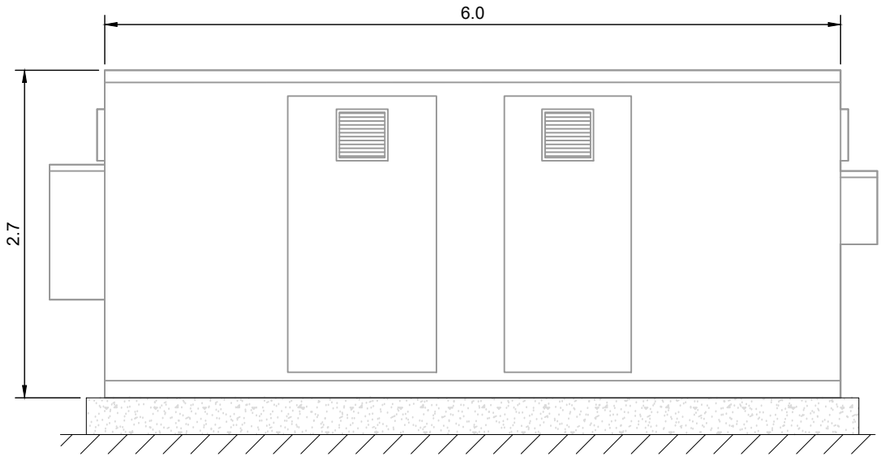

ELEVATION A
SCALE 1:50

HARMONIC FILTER

NOTES:

1. ALL DIMENSIONS ARE IN METRES UNLESS OTHERWISE STATED.
2. DETAILS SHOWN ARE TYPICAL AND ARE SUBJECT TO DETAILED DESIGN.
3. ALL DIMENSIONS ARE APPROXIMATE AND SUBJECT TO DETAILED DESIGN.

SHEET 1 OF 2

0 1 2 3m

SCALE 1:50

ISSUE	DRAWN	CHKD	APPD	DATE	REVISION NOTES
1	BM	AP	PH	2025-01-16	FIRST ISSUE

PURPOSE: PLANNING	COORDINATES: N/A
SCALE: 1:50 @A3	DATUM: N/A
LAYOUT DRAWING: N/A	T-LAYOUT NO: N/A

PROJECT TITLE
MACHAIRE
ENERGY STORAGE

DRAWING TITLE
HARMONIC FILTER

RES DRAWING NUMBER: 05511-RES-SUB-DR-PT-002
REV: 1

THIS DRAWING IS THE PROPERTY OF RENEWABLE ENERGY SYSTEMS LIMITED AND NO REPRODUCTION MAY BE MADE IN WHOLE OR IN PART WITHOUT PERMISSION

BEAUFORT COURT,
EGG FARM LANE,
KINGS LANGLEY,
HERTS WD4 8LR. UK
TEL +44 (0) 1923 299200
WWW.RES-GROUP.COM

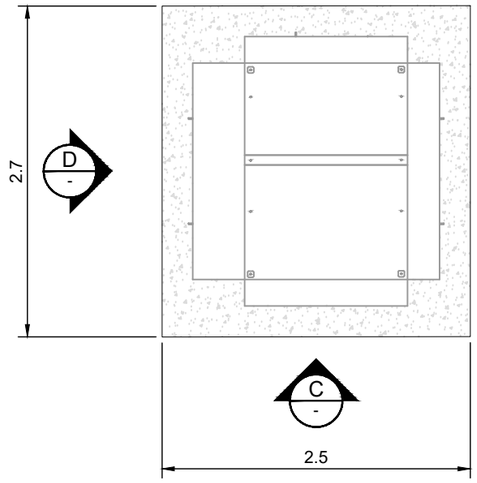

PLAN
SCALE 1:50

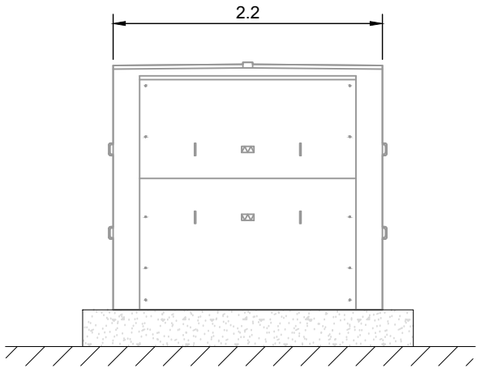

ELEVATION D
SCALE 1:50

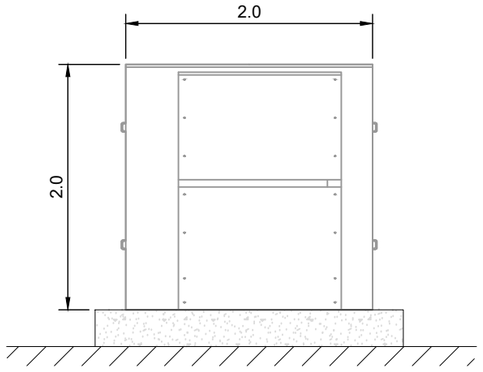

ELEVATION C
SCALE 1:50

RESISTOR

NOTES:

1. ALL DIMENSIONS ARE IN METRES UNLESS OTHERWISE STATED.
2. DETAILS SHOWN ARE TYPICAL AND ARE SUBJECT TO DETAILED DESIGN.
3. ALL DIMENSIONS ARE APPROXIMATE AND SUBJECT TO DETAILED DESIGN.

SHEET 2 OF 2

0 1 2 3m

SCALE 1:50

ISSUE	DRAWN	CHKD	APPD	DATE	REVISION NOTES
1	BM	AP	PH	2025-01-16	FIRST ISSUE

PURPOSE: PLANNING	COORDINATES: N/A
SCALE: 1:50 @A3	DATUM: N/A
LAYOUT DRAWING: N/A	T-LAYOUT NO: N/A

PROJECT TITLE
MACHAIRE
ENERGY STORAGE

DRAWING TITLE
HARMONIC FILTER

RES DRAWING NUMBER: 05511-RES-SUB-DR-PT-002
REV: 1

THIS DRAWING IS THE PROPERTY OF RENEWABLE ENERGY SYSTEMS LIMITED AND NO REPRODUCTION MAY BE MADE IN WHOLE OR IN PART WITHOUT PERMISSION

BEAUFORT COURT,
EGG FARM LANE,
KINGS LANGLEY,
HERTS WD4 8LR. UK
TEL +44 (0) 1923 299200
WWW.RES-GROUP.COM